Part 1 - GENERAL

Scope

The framing shall be Metro "T" Series fixed window system with thermal break as manufactured by Metro Glass. Furnish all materials, labour, and services for the complete fabrication, assembly and installation of aluminum framing as required based on the contract or the purchase agreement.

Work Not Included: Structural support for framing, wood liner, interior or exterior closures or trim. (See Specifiers list of other exclusions.)

Related Work Specified Elsewhere: See Specifier List

Design & Performance

Framing to fully comply with applicable standard specifications as typically referenced to the following requirement criteria: Air and water tightness, wind and other load resistance.

Maintenance and Warranty

Provide maintenance and cleaning data in accordance with instructions under General Conditions.

Metro Glass supplies a two year warranty which shall begin from the day the product is shipped or from substantial completion of the installation of materials and on the workmanship provided under this section.

Part 2 - PRODUCTS

Materials

All materials to meet design and material specifications as applicable. Extruded aluminum shall be 6063 T5 alloy and temper. Any defects impairing strength, durability or appearance are not acceptable.

Fasteners shall be of sufficient size and strength and made of corrosion-resistant and compatible materials.

Glazing gaskets shall be Polyshim II Tape a 100% solid, highly adhesive and elastic, cross-linked butyl preformed tape with a continuous integral EPDM shim and extruded black santoprene designed and sized to perform their intended function.

Fabrication

Frame assembly to provide accurately fit tight hairline joints only. Extruded profiles to be of sizes and profiles indicated in the contract or the purchase agreement. Corner joints shall be screw spline with fastening by means of anticorrosive steel screws.

Finish

Exposed surfaces shall be finished as selected by Specifier.

Standard Clear Anodizing: AA-M12C22A31

Standard Bronze Anodizing: AA-M12C22A34

Standard Black Anodizing: AA-M12C22A44

Duracron Acrylic Enamel: AAMA 603.8

Duranar Fluoropolymer paint: AAMA 605.2

Powdercoated finishes available.

Various Bronze Anodizing colours and paint qualities are available upon request.

Installation

Framing to be installed plumb, level and square and glazed by an experienced crew in prepared openings in accordance to the manufacturers instructions and approved shop drawings.

Bay 108 - 1626 115 Ave. N.E. Calgary, Alberta T3K 2E4 Phone: 403-250-9290 Fax: 403-291-0599

Toll Free: Phone: 1-877-919-0906 Fax: 1-877-919-0905

www.metroglass.ca

T SERIES OPERABLE WINDOW SPECIFICATIONS

Part 1 - GENERAL

Scope

The framing shall be Metro "T" Series operable window system with thermal break as manufactured by Metro Glass. Furnish all materials, labour, and services for the complete fabrication, assembly and installation of aluminum operable windows including all necessary hardware and accessories and/or preparation as required based on the contract or the purchase agreement.

Work Not Included: Structural support for framing, wood liner, interior or exterior closures or trim. (See Specifiers list of other exclusions.)

Related Work Specified Elsewhere: See Specifier List

Design & Performance

Metro "T" Series operable window system is designed to be used in most Metro Glass framing systems. Operable windows to fully comply with applicable standard specifications as typically referenced to the following requirement criteria: Air and water tightness, wind and other load resistance.

Maintenance and Warranty

Provide maintenance and cleaning data in accordance with instructions under General Conditions.

Metro Glass supplies a two year warranty which shall begin from the day the product is shipped or from substantial completion of the installation of materials and on the workmanship provided under this section.

Part 2 - PRODUCTS

Materials

All materials to meet design and material specifications as applicable. Extruded aluminum shall be 6063 T5 alloy and temper. Any defects impairing strength, durability or appearance are not acceptable.

Fasteners shall be of sufficient size and strength and made of corrosion-resistant and compatible materials.

Glazing gaskets shall be extruded black santoprene designed and sized to perform their intended function.

Fabrication

Frame assembly to provide accurately fit tight hairline joints only. Extruded profiles to be of sizes and profiles indicated in the contract or the purchase agreement. Corner joints shall be screw spline with fastening by means of anticorrosive steel screws and then welded.

Finish

Exposed surfaces shall be finished as selected by Specifier.

Standard Clear Anodizing: AA-M12C22A31

Standard Bronze Anodizing: AA-M12C22A34

Standard Black Anodizing: AA-M12C22A44

Duracron Acrylic Enamel: AAMA 603.8

Duranar Fluoropolymer paint: AAMA 605.2

Powdercoated finishes available.

Various Bronze Anodizing colours and paint qualities are available upon request.

Installation

Framing to be installed plumb, level and square and glazed by an experienced crew in prepared openings in accordance to the manufacturers instructions and approved shop drawings.

Bay 108 - 1626 115 Ave. N.E. Calgary, Alberta T3K 2E4 Phone: 403-250-9290 Fax: 403-291-0599
Toll Free: Phone: 1-877-919-0906 Fax: 1-877-919-0905
www.metroglass.ca

METRO GLASS PRODUCTS LTD.

T SERIES WINDOW WITH VENT INSERT

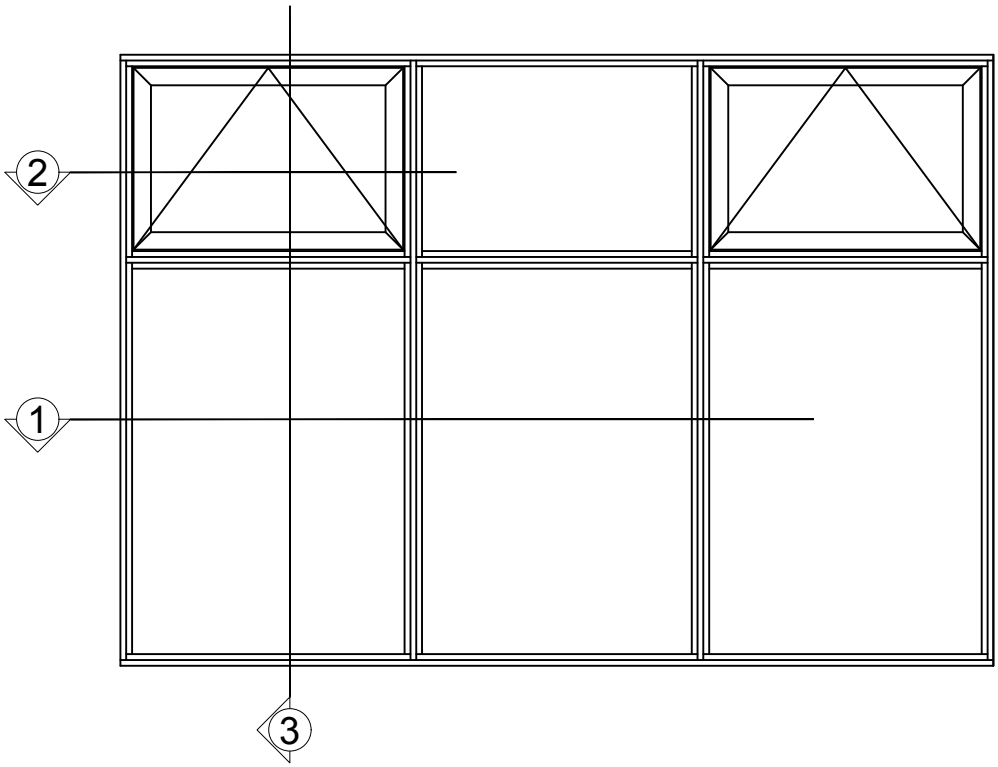

T SERIES: FIXED WINDOW SYSTEM

AN ECONOMICAL FRAMING SOLUTION FOR PUNCHED WINDOW AND HORIZONTAL STRIP WINDOW APPLICATIONS.

A THERMALLY BROKEN DOUBLE GLAZED SYSTEM THAT IS INTERIOR GLAZED ALLOWING EASY INSTALLATION AND REPLACEMENT OF SEALED UNITS .

SCREW SPLINE JOINERY ALLOWS FOR QUICK AND EASY FABRICATION.

T SERIES: OPERABLE WINDOW SYSTEM

T SERIES VENT INSERTS ARE A THERMALLY BROKEN DOUBLE GLAZED SYSTEM THAT CAN BE INCORPORATED INTO MOST METRO GLASS WINDOW SYSTEMS ALLOWING FOR INCREASED AIR FLOW AND VENTILATION.

SCREW SPLINE JOINERY ALLOWS FOR QUICK ASSEMBLY AND THEN JOINTS ARE WELDED FOR INCREASED STRENGTH.

T SERIES WINDOW
PLAN DETAILS

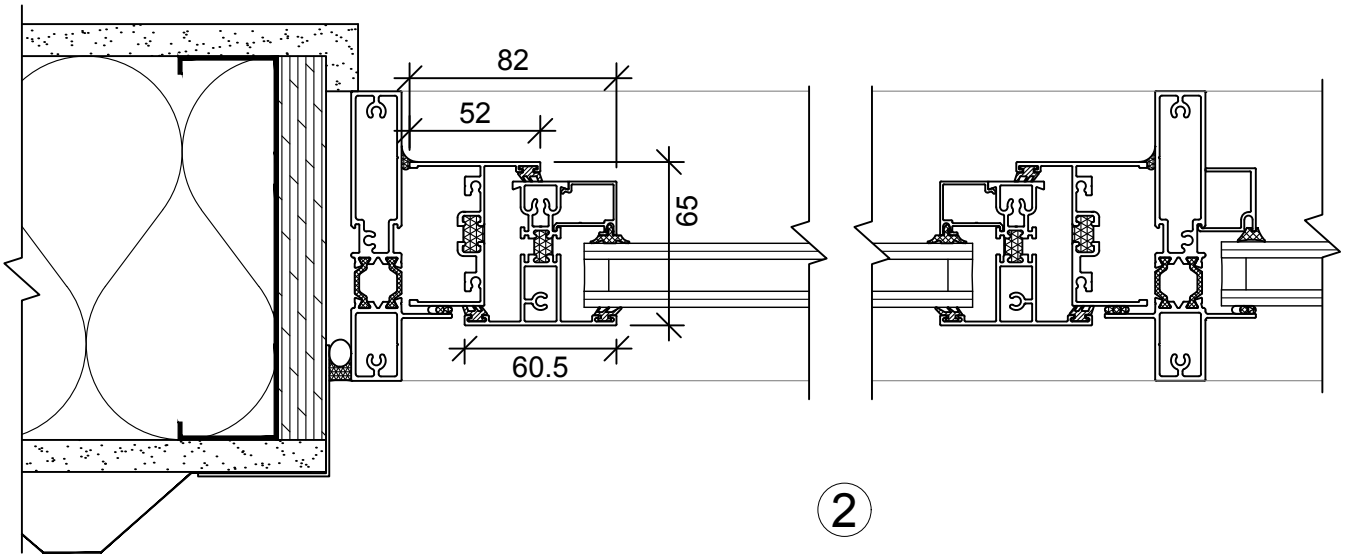

2

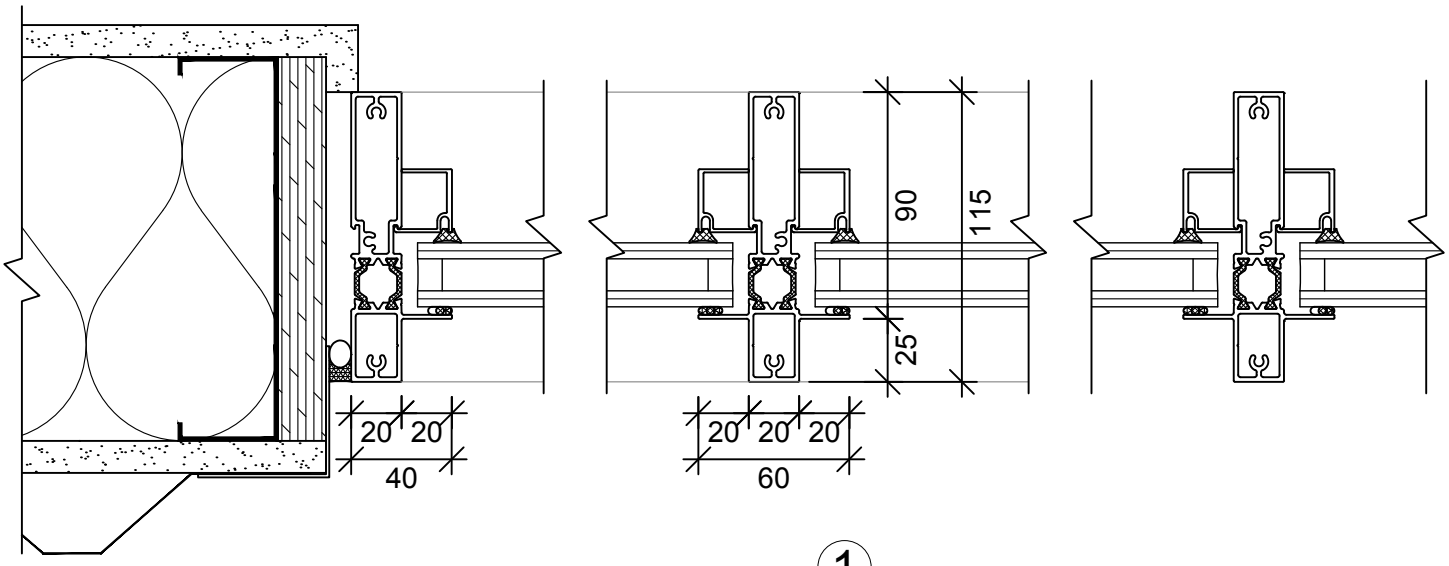

1

T SERIES WINDOW
SECTION DETAILS

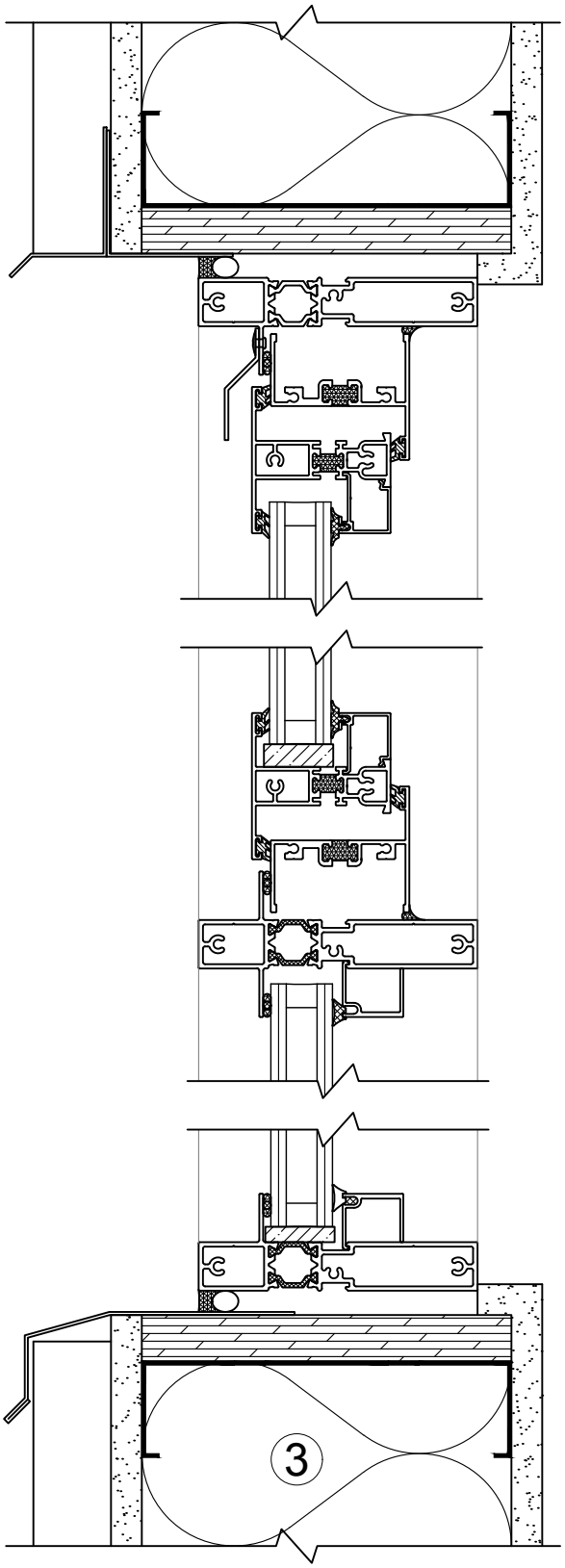

METRO GLASS PRODUCTS LTD.

T SERIES WINDOW PARTS

PART	NO.	DESCRIPTION	STOCK LENGTH IN METRES	CLEAR ANODIZED	BRONZE ANODIZED	BLACK ANODIZED
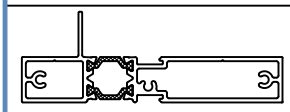	T-11	40mm X 115mm (1 9/16" X 4 1/2") HEAD, SILL & JAMB	7.3	✓	✓	✓
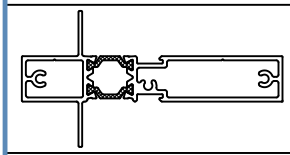	T-12	60mm X 115mm (2 3/8" X 4 1/2") INTERMEDIATE MULLION	7.3	✓	✓	✓
	T-4	T SERIES GLASS STOP	7.3	✓	✓	✓
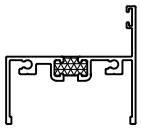	T-6	57mm X 52mm (2 1/4" X 2 1/8") VENT FRAME	7.3	✓	✓	✓
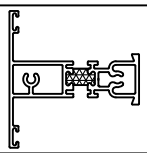	T-7	57mm X 52mm (2 1/4" X 2 3/8") VENT SASH	7.3	✓	✓	✓
	T-8	VENT SASH GLASS STOP	7.3	✓	✓	✓
	T-10	DRIP CAP	3.66	✓	✓	✓
	T-13	SCREEN BAR	3.66	✓	✓	✓
	688	GLAZING SEAL				

METRO GLASS PRODUCTS LTD.

T SERIES WINDOW
VENT HARDWARE

PART	NO.	DESCRIPTION	PART	NO.	DESCRIPTION
		CAM HANDLE			ROTO OPERATOR FOR CASEMENT VENTS
		CAM HANDLE KEEPER			DUAL ARM ROTO OPERATOR FOR AWNING VENTS
		HOOK LOCK			PUSHBAR
		HOOK LOCK KEEPER			VENT HINGE
					FRICTION HINGE

45 Years of Manufacturing Innovative Aluminum Doors, Frames, Curtain Walls, Windows and Vents

METRO GLASS PRODUCTS LTD.

T SERIES WINDOW
WIND LOAD CHART

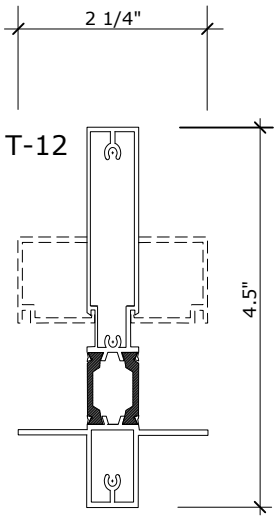

T-12

I x-x = 2.073 IN^4

S x-x =0.855 IN^3

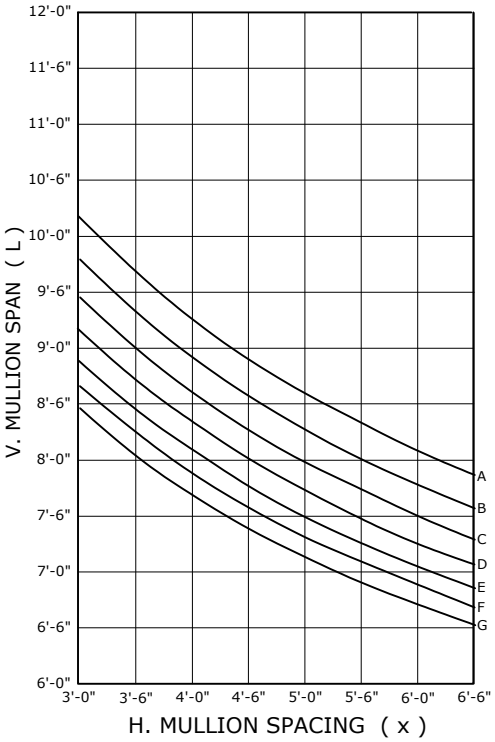

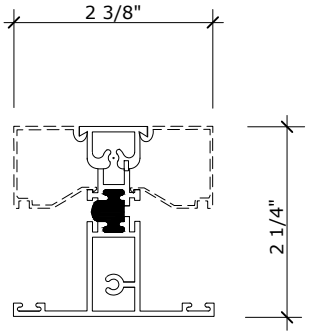

T7

I x-x = 2.8887 IN^4

S x-x = 1.123 IN^3

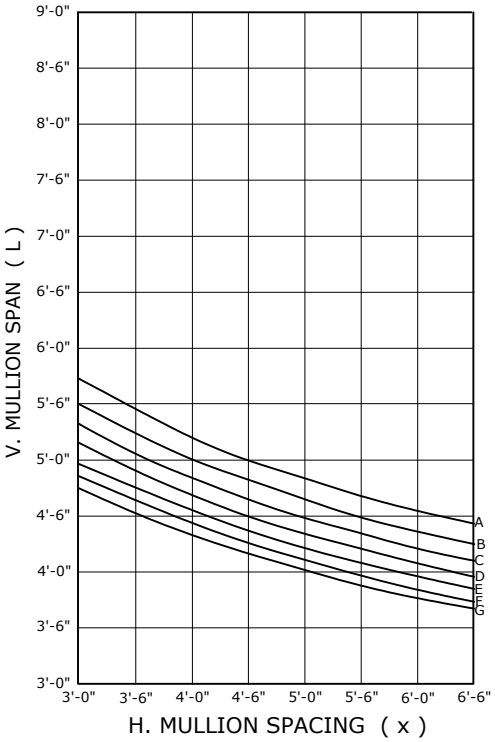

A = 20.0 PSF

B = 22.5 PSF

C = 25.0 PSF

D = 27.5 PSF

E = 30.0 PSF

F = 32.5 PSF

G = 35.0 PSF

DEFLECTION = L / 175